Electrolux PROFESSIONAL

Modular Cooking Range Line 700XP Electric Grill Top HP 800mm

ITEM #

MODEL #

NAME #

SIS #

AIA #

371267 (E7GREHGS0P)	Full module electric Grill Top - HP

Short Form Specification

Item No.

Heating via incoloy armored heating elements positioned under the cooking grid. Cooking surface grids are easily removable for cleaning. Heating elements can be tilted. Integrated water tap. Fixed well with drain. Extra strength work top in heavy duty 1,5 mm stainless steel. Right-angled side edges to allow flush-fitting junction between units. WRAS compliant. 415 V version.

APPROVAL:

Main Features

- Incoloy armoured heating elements positioned under the cooking grid.
- Each bank of elements has an independent power regulation through a control knob.
- Power indicator light.
- Fixed well with drain to collect residual cooking juices and grease.
- Large drain protected by overflow and filter.
- Water must be added to well before operation.
- Led warning indicator to give an alarm when well is empty.
- Water filling tap with knob control.
- Removable stainless steel deflectors to recuperate heat and reduce cooking time.
- Stainless steel splash guards on sides of cooking surface. Splash guards can be easily removed for cleaning.
- Heating elements tilt 90° for easy cleaning.
- Removable 2mm thick steel U-shaped grids in AISI 441 stainless steel for fast heating of cooking surface.
- Top configuration can be installed on refrigerated / freezer base with limited layout options.
- Suitable for countertop installation.

Construction

- Model has right-angled side edges to allow flush fitting joints between units, eliminating gaps and possible dirt traps.
- All exterior panels in Stainless Steel with Scotch Brite finishing.
- One piece pressed 1.5 mm work top in Stainless steel.
- Unit is 730mm deep to give a larger working surface area

Included Accessories

- 1 of Scraper for HP electric grill PNC 206436

Optional Accessories

- Junction sealing kit PNC 206086 ❑
- Support for bridge type installation, 800mm PNC 206137 ❑
- Support for bridge type installation, 1000mm PNC 206138 ❑
- Support for bridge type installation, 1200mm PNC 206139 ❑
- Support for bridge type installation, 1400mm PNC 206140 ❑
- Support for bridge type installation, 1600mm PNC 206141 ❑
- 2 supports with runners for open base for 4 GN1/1 PNC 206257 ❑
- Right and left side handrails PNC 206307 ❑
- Back handrail 800 mm PNC 206308 ❑
- Scraper for HP electric grill PNC 206436 ❑
- Drain extension for Electric grill HP PNC 206437 ❑
- 2 side covering panels for free standing appliances PNC 216000 ❑
- Frontal handrail, 800mm PNC 216047 ❑
- Frontal handrail, 1200mm PNC 216049 ❑
- Frontal handrail, 1600mm PNC 216050 ❑
- Large handrail - portioning shelf, 400mm PNC 216185 ❑
- Large handrail - portioning shelf, 800mm PNC 216186 ❑
- 2 side covering panels for top appliances PNC 216277 ❑

The company reserves the right to make modifications to the products without prior notice. All information correct at time of printing.

Modular Cooking Range Line
700XP Electric Grill Top HP 800mm

Front

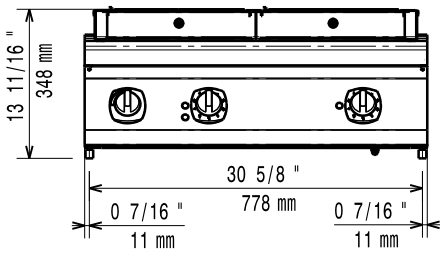

Side

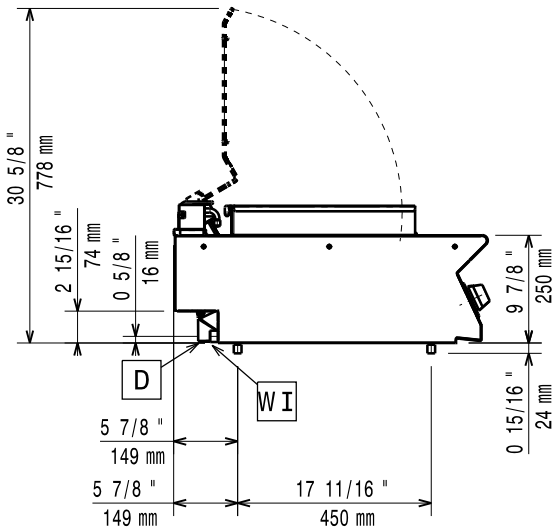

D = Drain
EI = Electrical inlet (power)
EQ = Equipotential screw
WI = Water inlet

Top

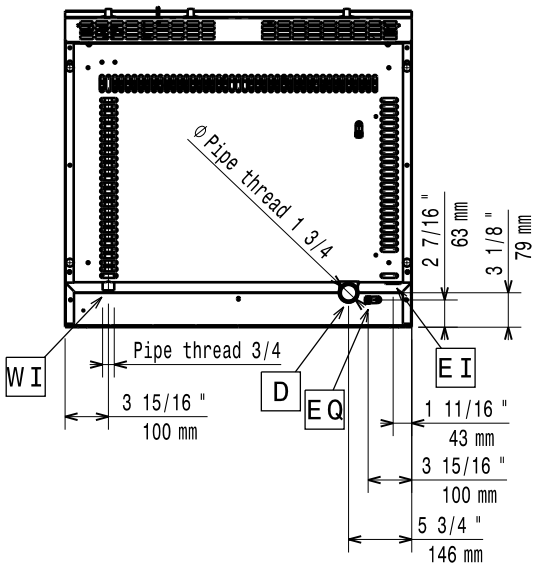

Electric

Supply voltage:	
371267 (E7GREHGS0P)	400-415 V/3N ph/50/60 Hz
Electrical power max.:	7.5 kW
	400-415V 3N~ 50/60Hz
Predisposed for:	6.9-7.5kW

Key Information:

Cooking surface width:	705 mm
Cooking surface depth:	400 mm
External dimensions, Width:	800 mm
External dimensions, Depth:	730 mm
External dimensions, Height:	250 mm
Net weight:	75 kg

If appliance is set up either next to or against temperature sensitive furniture or similar, a safety gap of approximately 150 mm should be maintained or some form of heat insulation fitted.

Certification group:	HEG7E2

The company reserves the right to make modifications to the products without prior notice. All information correct at time of printing.

2024.10.07